Ya Suh Dar

VENTILATION PRODUCTS FOR

POULTRY & LIVESTOCK APPLICATION

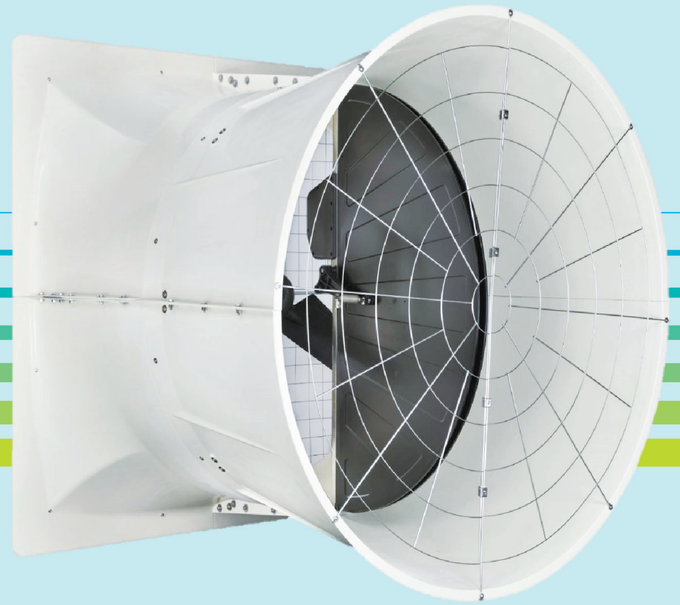

POULTRYNLIVESTOCK.YASUDA.COM.TW

Ya Suh Dar

Ya Suh Dar Co., Ltd.

Taichung Head Office

No.332, Ln. 549, Sec. 2, Sanfeng Rd., Fengyuan Dist.,
Taichung City 42073, Taiwan

/ +886-4-25278062 /+886-4-25291238 / +886-4-25293889

/ sales@yasuda.com.tw/ info@yasuda.com.tw/ contact@yasuda.com.tw

<Ya Suh Dar all rights reserved.>

2025-10

We Care About Your Needs

Trustful Performance

We have fan performance tests from Bess Lab at the University of Illinois. We provide trustful numbers that can be testified.

Reliable Quality

From designing to manufacturing, all the processes are completed at the YSD factory. We keep our eyes on every detail, and we guarantee the products we supply are in the best states.

High-Efficiency Design

The low wind resistance structure and high-efficiency motor make YSD exhaust fans powerful and energy-saving.

Permanent Service

YSD teams are always active. We are committed to supporting our customers promptly and effectively. We not only provide products with good performance, and we are also able to supply fan parts with excellent quality.

57-inch Exhaust Fan

FB57

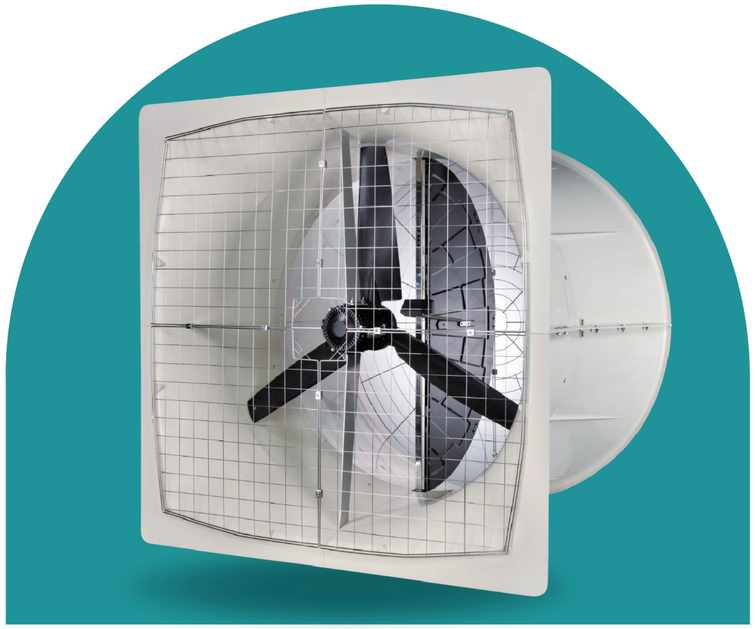

Fan Dimension L1760 x W1760 x D1515 mm

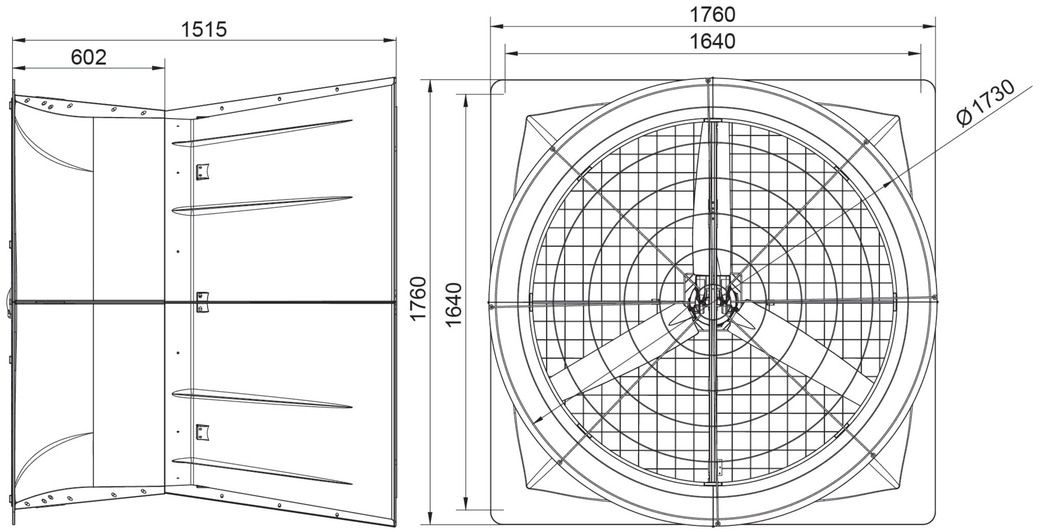

Corrosion Resistant
Fiberglass Housing
Nylon 6 + Fiber Blades

IE4 PMSM/
IE3 AC Motor
IP66
Easy cleaning
with high-pressure water spray

Electric/ Pneumatic
HIPS Plastic
Butterfly Damper

Direct-drive Motor
Low Maintenance
High Airflow Output

www.poultrynlivestock.yasuda.com.tw

FB57-PLUS-E [with Electric Butterfly Damper]

IE4 PMSM, 1.5KW, 690 RPM, 3 PH, 230V, 50/60 Hz

Project No. 23049

Static Pressure (in.H2O)	Airflow (cfm)	rpm	Volts	Amps	Watts	cfm/Watt	Static Pressure (Pa)	Airflow (m^3/hr.)	(m^3/hr)/W	W/1000m^3/hr
10v speed setting										
0.00	**37000**	690	229.2	4.47	1176	★**31.5**	0	62900	53.5	19
0.05	**35100**	690	230.7	4.78	1278	**27.4**	12	59600	46.6	21
0.10	**33200**	690	230.5	5.08	1369	**24.2**	25	56400	41.2	24
0.15	**31000**	690	230.5	5.36	1457	**21.3**	37	52600	36.1	28
0.20	**28600**	690	230.2	5.57	1527	**18.7**	50	48600	31.8	31
0.25	**25700**	683	230.1	5.57	1527	**16.8**	62	43700	28.6	35
0.30	**23000**	683	230.4	5.60	1527	**15.1**	75	39100	25.6	39

FB57-MAX-E [with Electric Butterfly Damper]

IE4 PMSM, 2.2KW, 750 RPM, 3 PH, 230V, 50/60 Hz

Project No. 23050

Static Pressure (in.H2O)	Airflow (cfm)	rpm	Volts	Amps	Watts	cfm/Watt	Static Pressure (Pa)	Airflow (m^3/hr.)	(m^3/hr)/W	W/1000m^3/hr
10v speed setting										
0.00	**40300**	750	230.5	5.53	1524	**26.4**	0	★68400	44.9	22
0.05	**38500**	750	230.2	5.87	1629	**23.7**	12	65500	40.2	25
0.10	**36700**	750	230.1	6.23	1740	**21.1**	25	62400	35.9	28
0.15	**34800**	750	229.6	6.59	1846	**18.8**	37	59100	32.0	31
0.20	**32800**	750	230.0	6.82	1923	**17.1**	50	55800	29.0	34
0.25	**30600**	750	229.6	7.04	1990	**15.4**	62	52000	26.2	38
0.30	**28500**	750	229.4	7.19	2036	**14.0**	75	48500	23.8	42

FB57-PLUS-E [with Electric Butterfly Damper]

IE4 PMSM, 1.5KW, 730 RPM, 3 PH, 400V, 50/60 Hz

Project No. 23047

Static Pressure (in.H2O)	Airflow (cfm)	rpm	Volts	Amps	Watts	cfm/Watt	Static Pressure (Pa)	Airflow (m^3/hr.)	(m^3/hr)/W	W/1000m^3/hr
10v speed setting										
0.00	**39400**	733	400.9	2.19	1433	**27.5**	0	66900	46.7	21
0.05	**37600**	734	402.3	2.35	1544	**24.4**	12	63900	41.4	24
0.10	**35600**	734	398.1	2.54	1647	**21.6**	25	60600	36.8	27
0.15	**33700**	733	399.6	2.66	1736	**19.4**	37	57300	33.0	30
0.20	**31600**	734	399.4	2.80	1818	**17.4**	50	53600	29.5	34
0.25	**29300**	734	398.3	2.89	1881	**15.6**	62	49800	26.5	38
0.30	**27100**	734	397.8	2.95	1913	**14.2**	75	46000	24.1	42

FB57-ONE-E [with Electric Butterfly Damper]

IE3 AC, 1.5KW , 690 RPM, 3PH, 230V, 60Hz

Project No. 23053

Static Pressure (in.H2O)	Airflow (cfm)	rpm	Volts	Amps	Watts	cfm/Watt	Static Pressure (Pa)	Airflow (m^3/hr.)	(m^3/hr)/W	W/1000m^3/hr
0.00	**37000**	696	230.5	6.01	1338	**27.7**	0	62900	47.0	21
0.05	**35200**	694	230.4	6.17	1423	**24.7**	12	59800	42.0	24
0.10	**33100**	691	230.1	6.34	1511	**21.9**	25	56200	37.2	27
0.15	**30700**	689	229.9	6.50	1597	**19.2**	37	52200	32.7	31
0.20	**28400**	688	230.1	6.62	1651	**17.2**	50	48300	29.2	34
0.25	**25600**	687	230.1	6.72	1704	**15.0**	62	43500	25.5	39
0.30	**23000**	686	230.0	6.74	1704	**13.5**	75	39100	22.9	44

FB57-ONE-E [with Electric Butterfly Damper]

IE3 AC, 1.8KW, 730 RPM, 3 PH, 400V, 50 Hz

Project No. 23052

Static Pressure (in.H2O)	Airflow (cfm)	rpm	Volts	Amps	Watts	cfm/Watt	Static Pressure (Pa)	Airflow (m^3/hr.)	(m^3/hr)/W	W/1000m^3/hr
0.00	**39100**	729	399.7	3.68	1478	**26.5**	0	66500	45.0	22
0.05	**36900**	727	399.7	3.79	1586	**23.3**	12	62800	39.6	25
0.10	**35100**	725	399.7	3.88	1669	**21.0**	25	59700	35.7	28
0.15	**33000**	723	399.6	3.98	1757	**18.8**	37	56000	31.9	31
0.20	**30800**	722	399.6	4.05	1827	**16.8**	50	52300	28.6	35
0.25	**28300**	720	399.6	4.11	1879	**15.1**	62	48100	25.6	39
0.30	**26000**	720	399.6	4.14	1898	**13.7**	75	44100	23.3	43

57-inch Exhaust Fan

FSL57

Fiberglass Housing
Nylon 6 + Fiber Blades

Pneumatic
PP Plastic Shutters
with Aluminum Frame &
Stainless Steel Linkage

IE4 PMSM/
IE3 AC Motor
IP66
Easy cleaning
with high-pressure water spray

Direct-drive Motor
Low Maintenance
High Airflow Output

Fan Dimension L1690 x H1690 x D1450 mm

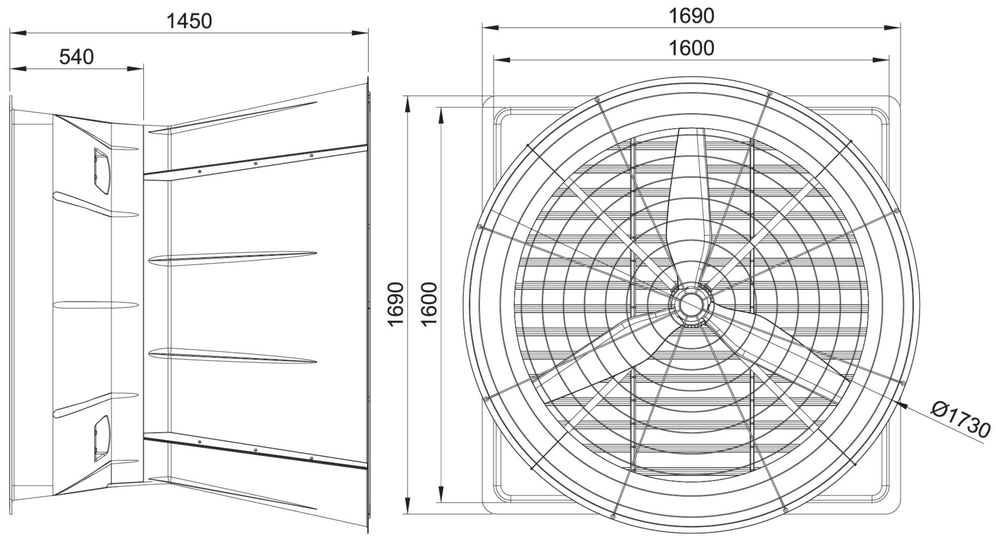

www.poultrynlivestock.yasuda.com.tw

FSL57-PLUS [with Plastic Shutters]

IE4 PMSM, 1.5KW, 690 RPM, 3 PH, 230V, 50/60 Hz

Project No. 23058

Static Pressure (in.H2O)	Airflow (cfm)	rpm	Volts	Amps	Watts	cfm/Watt	Static Pressure (Pa)	Airflow (m^3/hr.)	(m^3/hr)/W	W/1000m^3/hr
10v speed setting										
0.00	**32400**	690	229.2	5.21	1387	★**23.4**	0	55100	39.7	25
0.05	**30800**	688	229.2	5.32	1421	**21.7**	12	52400	36.9	27
0.10	**29000**	688	230.0	5.54	1487	**19.5**	25	49200	33.1	30
0.15	**27100**	686	230.0	5.64	1510	**17.9**	37	46000	30.5	33
0.20	**24900**	685	230.1	5.64	1511	**16.5**	50	42300	28.0	36
0.25	**22300**	683	230.1	5.64	1511	**14.8**	62	38000	25.1	40
0.30	**19300**	686	230.0	5.63	1510	**12.8**	75	32900	21.8	46

FSL57-MAX [with Plastic Shutters]

IE4 PMSM, 2.2KW, 750 RPM, 3 PH, 230V, 50/60 Hz

Project No. 23055

Static Pressure (in.H2O)	Airflow (cfm)	rpm	Volts	Amps	Watts	cfm/Watt	Static Pressure (Pa)	Airflow (m^3/hr.)	(m^3/hr)/W	W/1000m^3/hr
10v speed setting										
0.00	**35300**	750	230.2	6.35	1771	**19.9**	0	★59900	33.8	30
0.05	**34000**	750	230.5	6.54	1838	**18.5**	12	57800	31.4	32
0.10	**32400**	750	230.5	6.75	1908	**17.0**	25	55000	28.8	35
0.15	**30900**	750	230.1	6.92	1954	**15.8**	37	52400	26.8	37
0.20	**29400**	750	230.3	7.03	1989	**14.8**	50	49900	25.1	40
0.25	**27500**	750	230.1	7.12	2018	**13.6**	62	46800	23.2	43
0.30	**25600**	750	230.3	7.15	2029	**12.6**	75	43500	21.4	47

FSL57-PLUS [with Plastic Shutters]

IE4 PMSM, 1.5KW, 730 RPM, 3 PH, 400V, 50/60 Hz

Project No. 23056

Static Pressure (in.H2O)	Airflow (cfm)	rpm	Volts	Amps	Watts	cfm/Watt	Static Pressure (Pa)	Airflow (m^3/hr.)	(m^3/hr)/W	W/1000m^3/hr
10v speed setting										
0.00	**34400**	733	399.5	2.55	1664	**20.7**	0	58400	35.1	28
0.05	**33100**	733	401.1	2.64	1727	**19.2**	12	56200	32.6	31
0.10	**31300**	733	400.0	2.74	1788	**17.5**	25	53100	29.7	34
0.15	**29800**	733	399.5	2.82	1838	**16.2**	37	50600	27.6	36
0.20	**28100**	733	399.7	2.88	1875	**15.0**	50	47700	25.4	39
0.25	**26300**	733	399.3	2.91	1892	**13.9**	62	44700	23.6	42
0.30	**24300**	733	399.5	2.92	1907	**12.7**	75	41200	21.6	46

FSL57-ONE [with Plastic Shutters]

IE3 AC, 1.5 KW, 690 RPM, 3 PH, 230V, 60 Hz

Project No. 23072

Static Pressure (in.H2O)	Airflow (cfm)	rpm	Volts	Amps	Watts	cfm/Watt	Static Pressure (Pa)	Airflow (m^3/hr.)	(m^3/hr)/W	W/1000m^3/hr
0.00	**33000**	692	230.1	6.19	1495	**22.0**	0	56000	37.5	27
0.05	**31300**	691	230.1	6.30	1548	**20.2**	12	53300	34.4	29
0.10	**29500**	690	230.1	6.41	1599	**18.4**	25	50100	31.3	32
0.15	**27300**	688	230.1	6.51	1651	**16.6**	37	46400	28.1	36
0.20	**25500**	688	230.1	6.55	1669	**15.2**	50	43200	25.9	39
0.25	**23000**	687	229.7	6.57	1674	**13.7**	62	39100	23.3	43
0.30	**20600**	688	229.6	6.54	1668	**12.4**	75	35000	21.0	48

FSL57-ONE [with Plastic Shutters]

IE3 AC, 1.8KW, 730 RPM, 3PH, 400V, 50 Hz

Project No. 23071

Static Pressure (in.H2O)	Airflow (cfm)	rpm	Volts	Amps	Watts	cfm/Watt	Static Pressure (Pa)	Airflow (m^3/hr.)	(m^3/hr)/W	W/1000m^3/hr
0.00	**33800**	726	400.1	3.94	1686	**20.1**	0	57500	34.1	29
0.05	**32400**	724	400.1	4.01	1743	**18.6**	12	55000	31.6	32
0.10	**30600**	723	400.0	4.05	1792	**17.1**	25	52100	29.1	34
0.15	**28800**	722	400.1	4.10	1835	**15.7**	37	48900	26.6	38
0.20	**27000**	722	400.1	4.13	1863	**14.5**	50	45800	24.6	41
0.25	**24600**	722	400.1	4.14	1870	**13.2**	62	41900	22.4	45
0.30	**22200**	722	400.0	4.13	1861	**11.9**	75	37700	20.3	49

50-inch Exhaust Fan

FB50

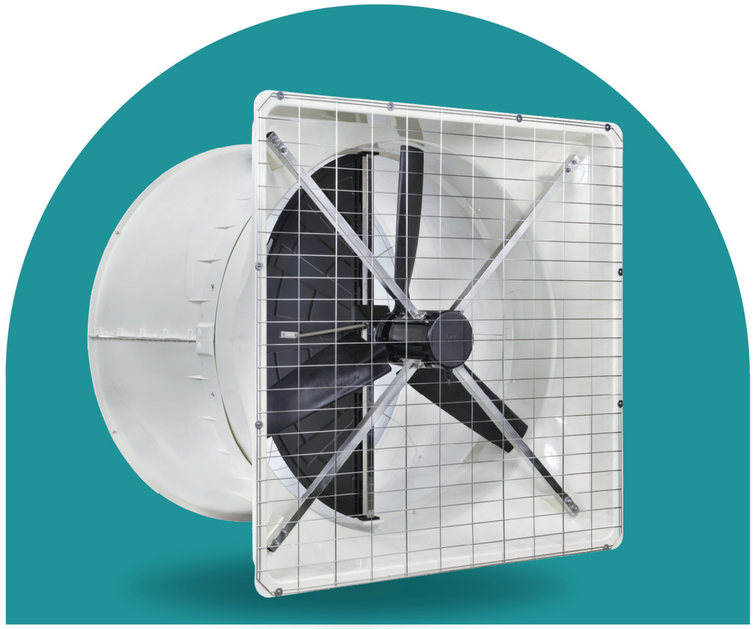

Corrosion Resistant
Fiberglass Housing
PP Plastic + Fiber Blades

IE4 PMSM/
IE3 AC Motor
IP66
Easy cleaning
with high-pressure water spray

Electric/ Pneumatic
HIPS Plastic
Butterfly Damper

Direct-drive Motor
Low Maintenance
High Airflow Output

Fan Dimension L1450 x W1450 x D1186 mm

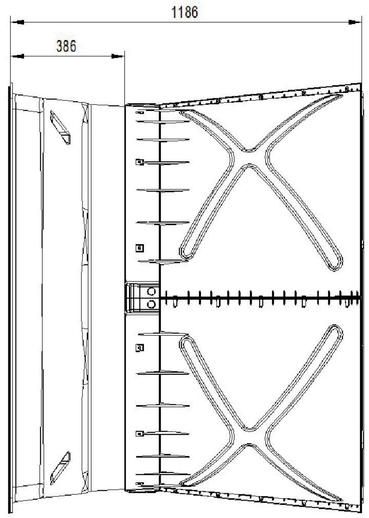

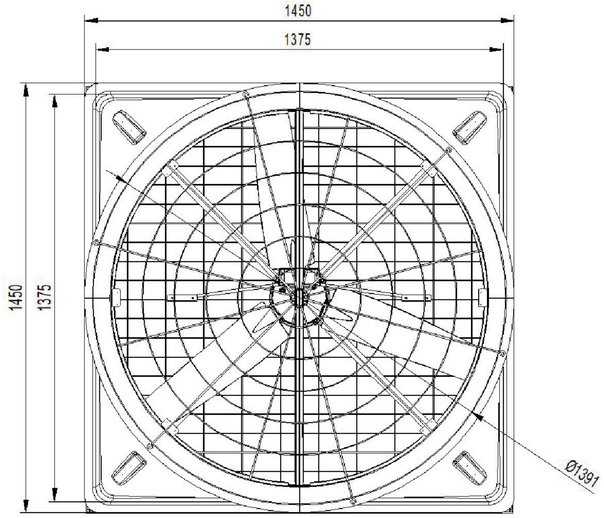

www.poultrynlivestock.yasuda.com.tw

FB50-PLUS-P39-E

IE4 PMSM, 1.5KW, 720RPM, 3 PH, 220V, 50/60 Hz — **Project No. 25338**

Static Pressure (in.H2O)	Airflow (cfm)	rpm	Volts	Amps	Watts	cfm/Watt	Static Pressure (Pa)	Airflow (m^3/hr.)	(m^3/hr)/W	W/1000m^3/hr
10vdc speed setting										
0.00	**27600**	721	220.5	4.59	1200	**23.0**	0	46800	39	26
0.05	**26100**	721	220.5	4.82	1258	**20.7**	12	44300	35.2	28
0.10	**24500**	721	220.5	4.95	1304	**18.8**	25	41600	31.9	31
0.15	**22900**	721	220.5	5.09	1342	**17.0**	37	38800	28.9	35
0.20	**21200**	721	220.5	5.18	1373	**15.5**	50	36100	26.3	38
0.25	**19400**	721	220.0	5.25	1392	**13.9**	62	33000	23.7	42
0.30	**17300**	721	220.6	5.26	1391	**12.5**	75	29500	21.2	47

PB50-PLUS-P42-E

IE4 PMSM, 1.5KW, 850 RPM, 3 PH, 220V, 50/60 Hz — **Project No. 25327**

Static Pressure (in.H2O)	Airflow (cfm)	rpm	Volts	Amps	Watts	cfm/Watt	Static Pressure (Pa)	Airflow (m^3/hr.)	(m^3/hr)/W	W/1000m^3/hr
10v speed setting										
0.00	**29900**	852	219.8	5.74	1537	**19.5**	0	50800	33.1	30
0.05	**28300**	852	219.6	5.92	1585	**17.9**	12	48200	30.4	33
0.10	**26600**	852	219.4	6.02	1620	**16.4**	25	45300	27.9	36
0.15	**25100**	852	219.6	6.12	1656	**15.1**	37	42600	25.7	39
0.20	**23400**	852	219.7	6.19	1675	**14.0**	50	39800	23.7	42
0.25	**21200**	852	219.7	6.25	1691	**12.5**	62	36000	21.3	47
0.30	**19000**	852	220.0	6.11	1672	**11.4**	75	32300	19.3	52

FB50-ONE-P39

IE3 AC, 1.1KW, 690 RPM, 3 PH, 220V, 60 Hz — **Project No. 25343**

Static Pressure (in.H2O)	Airflow (cfm)	rpm	Volts	Amps	Watts	cfm/Watt	Static Pressure (Pa)	Airflow (m^3/hr.)	(m^3/hr)/W	W/1000m^3/hr
0.00	**25100**	692	220.5	5.56	1229	**20.4**	0	42700	34.7	29
0.05	**23100**	690	220.9	5.66	1270	**18.2**	12	39300	30.9	32
0.10	**21300**	690	220.9	5.72	1303	**16.3**	25	36100	27.7	36
0.15	**19300**	689	220.9	5.76	1324	**14.6**	37	32900	24.8	40
0.20	**17300**	689	220.3	5.77	1337	**12.9**	50	29400	22	45
0.25	**14700**	690	220.6	5.71	1303	**11.3**	62	25100	19.2	52
0.30	**11100**	692	220.4	5.55	1234	**9.0**	75	18800	15.3	66

FB50-ONE-P39

IE3 AC, 1.1 KW, 720 RPM, 3 PH, 380V, 50 Hz — **Project No. 25345**

Static Pressure (in.H2O)	Airflow (cfm)	rpm	Volts	Amps	Watts	cfm/Watt	Static Pressure (Pa)	Airflow (m^3/hr.)	(m^3/hr)/W	W/1000m^3/hr
0.00	**26400**	722	380.4	3.05	1325	**19.9**	0	44800	33.8	30
0.05	**24500**	721	380.4	3.11	1376	**17.8**	12	41600	30.3	33
0.10	**22400**	719	380.4	3.16	1411	**15.9**	25	38100	27	37
0.15	**20800**	718	380.4	3.19	1439	**14.4**	37	35300	24.5	41
0.20	**18900**	718	380.4	3.20	1446	**13.1**	50	32100	22.2	45
0.25	**16900**	718	380.4	3.19	1446	**11.7**	62	28700	19.8	50
0.30	**13500**	720	380.4	3.10	1376	**9.8**	75	22900	16.6	60

PB50-ONE-P42-E

IE3 AC, 1.5KW, 850RPM, 3 PH, 220V, 60HZ — **Project No. 25329**

Static Pressure (in.H2O)	Airflow (cfm)	rpm	Volts	Amps	Watts	cfm/Watt	Static Pressure (Pa)	Airflow (m^3/hr.)	(m^3/hr)/W	W/1000m^3/hr
0.00	**30000**	851	219.6	5.60	1653	**18.2**	0	51000	30.9	32
0.05	**28400**	849	219.4	5.71	1689	**16.8**	12	48200	28.5	35
0.10	**26900**	847	219.5	5.80	1725	**15.6**	25	45700	26.5	38
0.15	**25100**	846	219.3	5.90	1758	**14.3**	37	42600	24.2	41
0.20	**23100**	844	219.1	5.96	1779	**13.0**	50	39200	22	45
0.25	**20900**	844	219.6	5.98	1789	**11.7**	62	35400	19.8	50
0.30	**18300**	845	219.6	5.90	1761	**10.4**	75	31200	17.7	57

50-inch Exhaust Fan

NC300DL

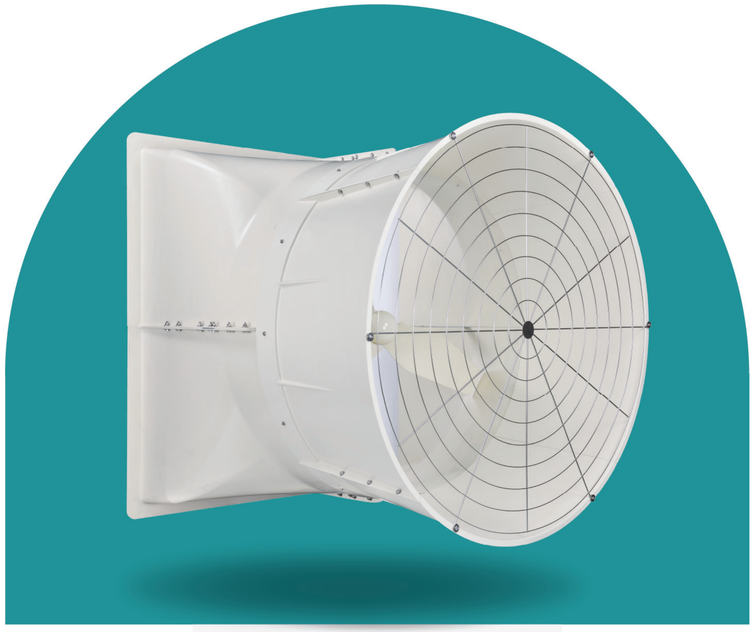

Fan Dimension L1470 x H1470 x D1350 mm

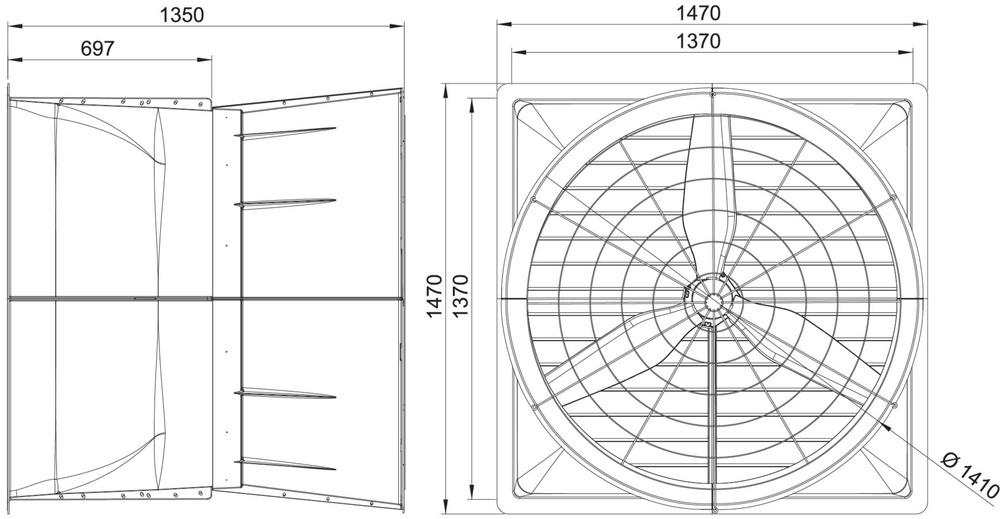

Corrosion Resistant Fiberglass Housing Blades and Cone

IE4 PMSM/ IE3 AC Motor IP66 Easy cleaning with high-pressure water spray

Pneumatic PP Plastic Shutters with Aluminum Frame & Stainless Steel Linkage

Low Wind Resistance Design

www.poultrynlivestock.yasuda.com.tw

N-C300DL [with Plastic Shutters]

IE4 PMSM, 1.1KW, 1 PH, 730 RPM, 220V, 50/60 Hz

Project No. 20393

Static Pressure (in.H2O)	Airflow (cfm)	rpm	Volts	Amps	Watts	cfm/Watt	Static Pressure (Pa)	Airflow (m^3/hr.)	(m^3/hr)/W	W/1000m^3/hr
10 VDC										
0.00	**25300**	731	229.9	5.82	1177	**21.5**	0	43100	36.6	27
0.05	**24200**	731	229.4	5.98	1224	**19.8**	12	41200	33.7	30
0.10	**23000**	731	229.9	6.09	1263	**18.2**	25	39000	30.9	32
0.15	**21600**	731	229.8	6.19	1300	**16.6**	37	36800	28.3	35
0.20	**20100**	731	230.4	6.25	1322	**15.2**	50	34200	25.9	39
0.25	**17700**	731	230.9	6.31	1345	**13.2**	62	30100	22.4	45
0.30	**15300**	731	231.4	6.35	1358	**11.3**	75	26000	19.2	52

N-C300DL [with Plastic Shutters]

IE3 AC, 1.1KW, 690 RPM, 3 PH, 220V, 60 Hz

Project No. 20396

Static Pressure (in.H2O)	Airflow (cfm)	rpm	Volts	Amps	Watts	cfm/Watt	Static Pressure (Pa)	Airflow (m^3/hr.)	(m^3/hr)/W	W/1000m^3/hr
0.00	**24300**	699	220.4	6.40	1159	**20.9**	0	41200	35.6	28
0.05	**23000**	699	220.4	6.46	1203	**19.1**	12	39100	32.5	31
0.10	**21700**	698	220.2	6.51	1231	**17.7**	25	37000	30.0	33
0.15	**20200**	697	219.0	6.49	1257	**16.1**	37	34400	27.3	37
0.20	**18100**	687	222.4	6.64	1291	**14.0**	50	30800	23.9	42
0.25	**15700**	696	220.1	6.60	1298	**12.1**	62	26700	20.6	49
0.30	**12800**	696	220.0	6.60	1303	**9.8**	75	21800	16.7	60

N-C300DL [with Plastic Shutters]

IE3 AC, 1.5KW, 810 RPM, 3 PH, 220V, 60 Hz

Project No. 20397

Static Pressure (in.H2O)	Airflow (cfm)	rpm	Volts	Amps	Watts	cfm/Watt	Static Pressure (Pa)	Airflow (m^3/hr.)	(m^3/hr)/W	W/1000m^3/hr
0.00	**28200**	807	220.7	5.85	1813	**15.6**	0	47900	26.4	38
0.05	**27000**	803	220.6	6.02	1863	**14.5**	12	45900	24.6	41
0.10	**25700**	799	220.2	6.18	1912	**13.4**	25	43600	22.8	44
0.15	**24400**	796	220.5	6.30	1951	**12.5**	37	41500	21.3	47
0.20	**23100**	792	220.0	6.42	1986	**11.6**	50	39200	19.8	51
0.25	**21700**	790	220.2	6.51	2012	**10.8**	62	36800	18.3	55
0.30	**19900**	788	220.2	6.57	2030	**9.8**	75	33800	16.6	60

N-C300DL [with Plastic Shutters]

IE3 AC, 1.1KW, 730 RPM, 3 PH, 380V, 50 Hz

Project No. 20398

Static Pressure (in.H2O)	Airflow (cfm)	rpm	Volts	Amps	Watts	cfm/Watt	Static Pressure (Pa)	Airflow (m^3/hr.)	(m^3/hr)/W	W/1000m^3/hr
0.00	**25300**	727	380.6	2.93	1204	**21.0**	0	42900	35.6	28
0.05	**24000**	726	380.6	2.97	1248	**19.3**	12	40800	32.7	31
0.10	**22800**	725	380.6	3.02	1283	**17.8**	25	38700	30.2	33
0.15	**21400**	724	380.6	3.05	1309	**16.3**	37	36300	27.8	36
0.20	**19700**	723	380.6	3.08	1335	**14.7**	50	33400	25.0	40
0.25	**17300**	723	380.6	3.10	1351	**12.8**	62	29300	21.7	46
0.30	**15000**	722	380.5	3.12	1363	**11.0**	75	25500	18.7	53

36-inch Exhaust Fan

L300DL

Fan Dimension L1080 x H1080 x D990 mm

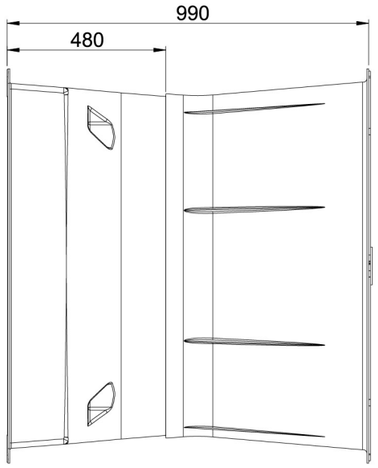

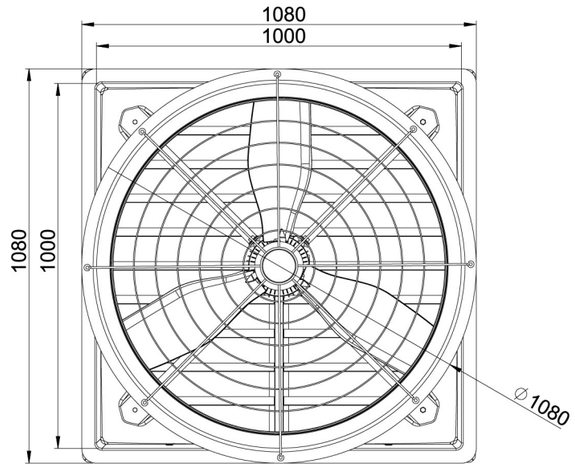

Fiberglass Housing
Nylon 6 + Fiber Blades

IP66 1.1 KW PMSM/
IP54 1 HP AC Motor

Pneumatic
PP Plastic Shutters
with Aluminum Frame &
Stainless Steel Linkage

850 RPM
Airflow: 21100 CMH
(+10 % Airflow
with Extended Cone)

www.poultrynlivestock.yasuda.com.tw

24-inch Exhaust Fan

F024DL

Fiberglass Housing
Nylon 6 + Fiber Blades

IP54 1/3 HP AC Motor
1145 RPM (60 Hz)

Pneumatic
PP Plastic Shutters
with Aluminum Frame &
Stainless Steel Linkage

1145 RPM (60 Hz)
Airflow: 9600 CMH
(+10 % Airflow
with Extended Cone)

Fan Dimension L770 x H770 x D1015 mm

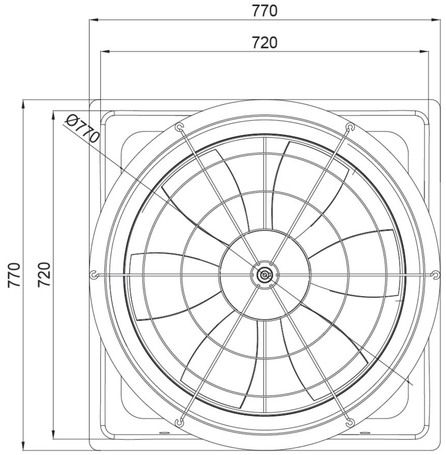

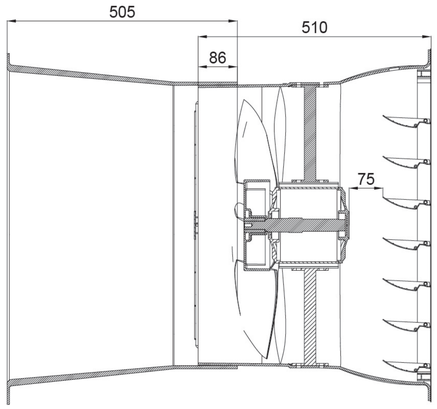

www.poultrynlivestock.yasuda.com.tw

30-inch Circulation Fan

D30-FAN

Corrosion Resistant PP Plastic + Fiber Housing & Blades

3/4 HP AC Motor 810 RPM (60 Hz)

100% Tested Before Delivery

Spiral Air Inducing Front Guard Powerful Wind Fetch Over 25 M

Fan Dimension L885 x H885 x D380 mm

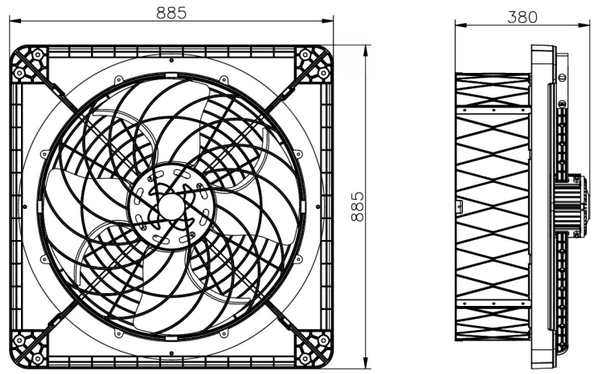

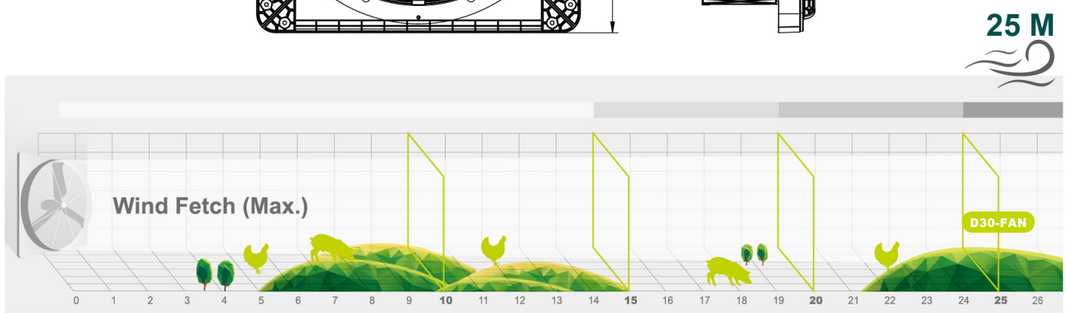

www.poultrynlivestock.yasuda.com.tw

24-inch Circulation Fan

D24-FAN

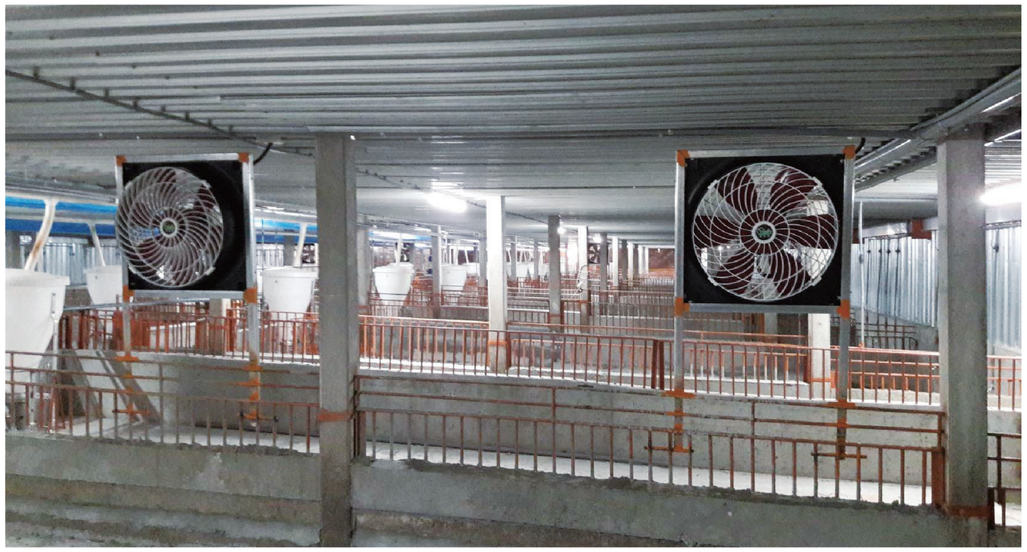

Corrosion Resistant
PP Plastic Housing
Nylon 6 + Fiber Blades

1/3 HP AC Motor
1100 RPM (60 Hz)

100% Tested
Before Delivery

Spiral Air Inducing
Front Guard
Powerful Wind Fetch
Over 20 M
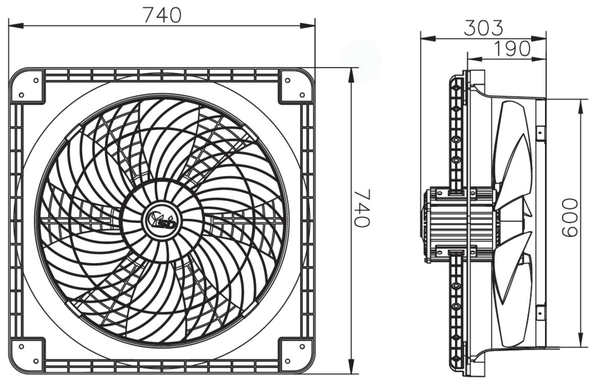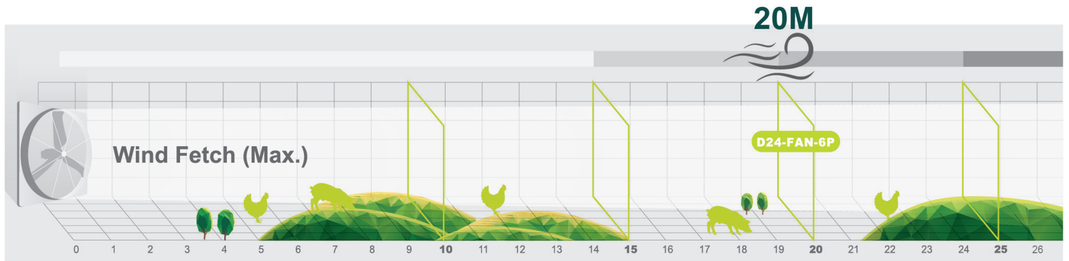
Fan Dimension L740 x H740 x D303 mm